Application of Bidirectional Switching Power Supply with Energy Recycle and AC Grid Function

Date: 2021.4.29
By: Willard Wu /Technical Dept.

With the development of technology, comfort and convenience have been brought to humans; however, environmental issues and energy shortage follow. The arising environmental awareness and the urgent appeal to energy shortage solution expedite the development of renewable energy and green industry. Consequently, the adequacy of electric energy conversion and energy storage systems becomes vital. Also, the development of solar energy-related technologies, wind energy, and fuel cells has gained more attention than ever.

This article focuses on the application of bidirectional power, BIC-2200 series, used on battery formation and grading step for quality control of lithium battery manufacture, at the same time, it also achieves power recycle and power saving. Figure 1 shows a diagram of the AC-DC bidirectional switching power supply application.

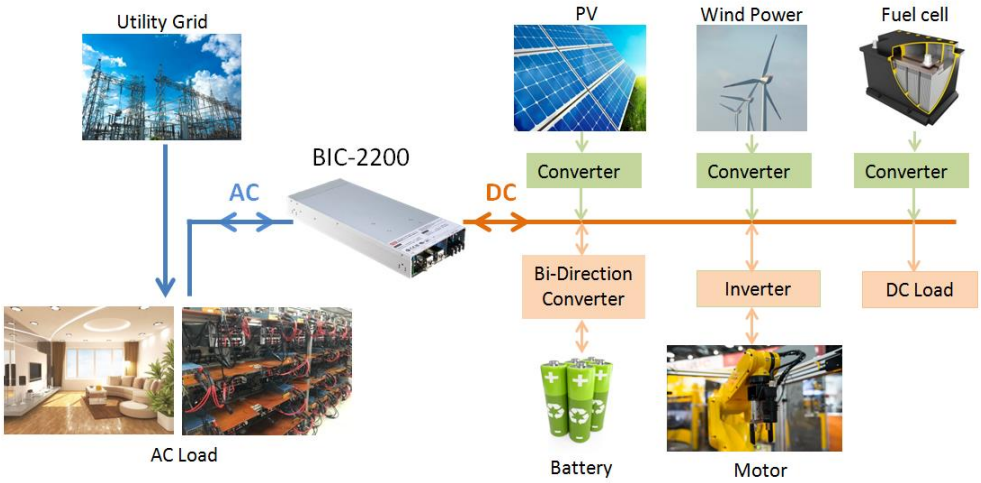

Figure 1. Diagram of the AC-DC Bidirectional Switching Power Supply Application

Lithium batteries have outstanding advantages such as high energy density, no memory effect, long cycle life and low self-discharge, ideal power sources for small and lightweight electronic devices such as mobile phones, cameras, laptop, portable measuring instruments, high-energy power source for electric vehicles and military applications. Due to its wide application and high requirements, its production quality also attracting attention.

There are two most important production process of the battery. One is formation, and grading is another. After the battery cell is manufactured, the internal positive and negative materials are activated through a specific charge and discharge procedure.

The formation process is to improve the charge and discharge performance, self-discharge, storage and overall performance. The simple way to understand grading is through the charging and discharging process to achieve battery capacity classification and performance sorting. Basically, principles of formation and grading are the same; their functions can be integrated into the same system, acting as a charger. The formation and grading system can charge and discharge many battery cells at the same time.

In the process of formation and grading, the battery cells need to be continuously charged and discharged. The power consumption is also a considerable production cost. To save production costs, the manufacturer will design formation and grading system through the bidirectional power supply BIC-2200 and bidirectional DC/DC converter as shown in Figure 2. The battery can be charged when working in the forward conversion. With the bidirectional power supply BIC-2200 and bidirectional DC/DC converter working under forwarding conversion, the battery can be charged. On the contract, working in the reverse conversion, the battery can be discharged. When the battery is discharged, the electric energy is recycled back into the AC grid and provided to other AC loads to save electricity costs.

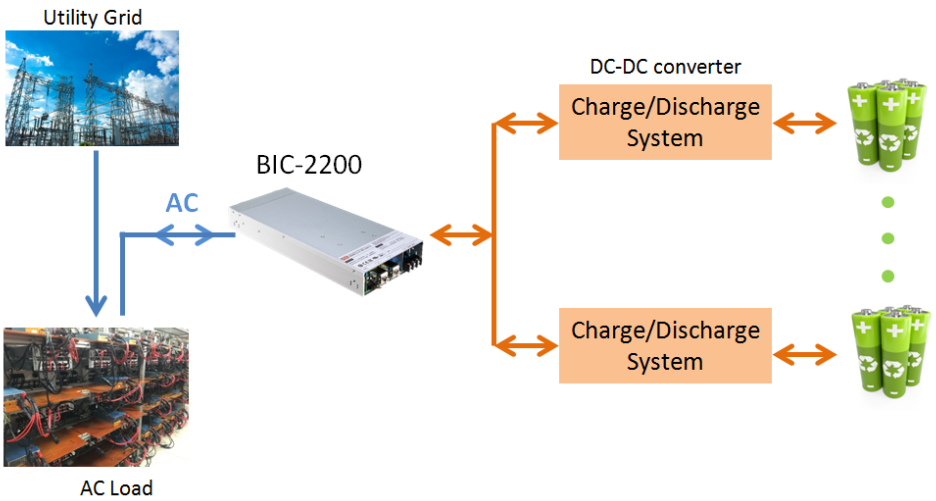

Figure 2. Configuration of Formation and Grading System

MEAN WELL has newly launched BIC-2200 Bidirectional switching power supply with energy recycle and AC grid function. This series is a 2.2kW two-way power supply. It is designed to control the power transmission from the AC grid to the DC side and the energy recycled from the DC side to the AC grid. The bidirectional switching power supply allows the grid to charge the battery and feed the electric energy back into the AC grid to achieve energy recycling.

BIC-2200 has a built-in parallel function, remote control and digital communication function. It can provide a wide range of design flexibility for battery test equipments, charging stations, laser systems and kinetic energy recovery systems.

If you have any questions about the bidirectional switching power supply, please feel free to contact MEAN WELL technical service personnel.

References：

1 https://learnenergy.tw/index.php?inter=knowledge&id=344
2 https://kknews.cc/news/6ozv89m.html
3 https://kknews.cc/zh-tw/news/a3zx96v.html
4 https://kknews.cc/zh-tw/science/pem2l3z.html
5 https://www.ctimes.com.tw/DispArt/tw/%E4%BA%9E%E5%BE%B7%E8%AB%BE%E5%8D%8A%E5%B0%8E%E9%AB%94/ADI/%E7%BE%8E%E5%95%86%E4%BA%9E%E5%BE%B7%E8%AB%BE/%E5%85%85%E9%9B%BB%E9%9B%BB%E6%B1%A0/%E8%83%BD%E6%BA%90%E8%B6%B3%E8%B7%A1/1508031001D4.shtml